Current Matters

Committed to improving the quality of life of our members

April 2009
Vol. 1 Issue 4

Nobles Cooperative Electric
Your Touchstone Energy® Cooperative

CFLs not only light your kitchen — they stock your refrigerator

Your cooperative challenges you to replace five incandescent lights to compact fluorescent bulbs (CFLs). You could save enough over the life of your CFLs for that extra bag of groceries.

Energy Star® qualified CFLs:

• Use about 75 percent less energy than standard incandescent bulbs and last up to 10 times longer.

• Save approximately $30 in electricity costs over each bulb's lifetime.

• Produce about 75 percent less heat, making them safer to operate and cutting energy costs associated with home cooling.

• Are available in different sizes and shapes to fit in almost any fixture, indoors or out.

Proper selection ensures your CFLs will last longer and provide better lighting. Use the following guidelines to match the right CFL to the right fixture:

• CFLs perform best in open fixtures that allow airflow, such as table and floor lamps, wall sconces, pendants and outdoor fixtures.

• For recessed fixtures, it is better to use a reflector CFL than a spiral CFL since the design of the reflector evenly distributes the light down to your task area.

• If a light fixture is connected to a dimmer or a three-way socket fixture, you'll need to use an Energy Star qualified CFL that specifies compatibility with those fixtures.

• Choose the shade of light that will work best for your lighting needs. Most CFLs provide warm or soft light for general home lighting. However, a cooler color may work better for task lighting.

• Get the right amount of light that is labeled as equivalent to the incandescent bulb you are replacing.

Be sure to look inside *Current Matters* for your $2 coupon good at any retailer that carries GE-brand Energy Star CFLs. Members may also enjoy $2 off selected GE-brand Energy Star CFLs at participating Wal-Mart stores. The promotions run from April 1 to June 30, 2009.

Switching to CFLs is a great way to reduce energy consumption and protect the environment.

Energy saving tip

Air seal and insulate your attic! More than 50 percent of the energy used in a typical American home is for space heating and cooling. Much of that conditioned air escapes through poorly sealed, under-insulated attics. Only 20 percent of homes built before 1980 are well insulated. Properly sealing and insulating your attic can save you up to 10 percent annually on energy bills.

Source: U.S. Dept. of Energy

Mark your calendar

April 12 ..... Happy Easter!
April 22 ..... Earth Day
May 1 ..... Read your meter
May 10 ..... Happy Mother's Day!
May 11 ..... Electric bills due

PROMOTION RUNS APRIL 1 – JUNE 30, 2009

Enter to win a $500 Energy Credit at mnbrighterideas.com

2 Manager's message

3 CFL bulb recycling made easy

4 Keep farm safety in mind this spring

A word from your General Manager

by Richard 'Rick' Burud

Nominating Committee seeking candidates

The Nominating Committee met on Friday, March 13 to start the process of nominating board member candidates from Districts 1, 2 and At-Large. If you want to be considered, please contact Julie at our office (507-372-7331) and she'll forward your name to the nominator from your district.

Green house legislation (CO_2 reduction)

Recently I visited our legislators in Washington D.C. on the hydroelectric proposals. However, most of the time was spent on carbon legislation. Proposals were everywhere from a straight carbon tax to a CO_2 cap and trade system. You may ask, why are we so interested? Well, a good share of your electricity is produced from North Dakota lignite coal and both of these proposals will have significant effect on your future costs, as well as you personally. These proposals, if they clean up our environment, would be one thing, but to fund deficits and stimulus payments will not help our environment. Hopefully, by the time we have meaningful legislation our elected officials have worked through these issues.

All the legislators say we'll have some type of legislation. We'll need your help to influence legislation before this item is law. Yes, you can make a difference!

Proposals have varying effects, but the lowest proposal today would be about $15 per month for a residence only. Since no specific legislation is introduced, we need to be sure of the financial impact and where the revenue will be going. This item is a key element to produce economical electric energy today and tomorrow for your farm, home or business.

We are facing tremendous challenges in our energy sector. When it comes to finding solutions, we must meet climate change goals while keeping costs down and electricity available. America needs a plan. Immediately. We all know that our energy needs keep on growing every day.

Now is the time to have a candid conversation with your elected officials. Together, we can find answers and take action.

Start the conversation today at www.ourenergymn.coop.

Emergency response is at your fingertips

If you've ever worried that you or a loved one could spend hours alone hurt or incapacitated, worry no more. Nobles Cooperative Electric's emergency response phone system can provide a 24-hour link to someone who can help in an emergency. Whenever you press the pendant, the device transmits a signal to the Cooperative Reponse Center. A professionally-trained service representative will be able to summon appropriate help immediately, no matter what your need may be.

"The MainStreet Messenger has given me the assurance of knowing that, if anything happens to me, I'm not alone. I can work in my garden and know that by pressing the pendant, help is on the way."

To learn more about how you and your loved ones can benefit from this service contact us.

Yes, I'd like more information regarding the emergency response phone system. Please contact me.

Your name

Address

City and zip

Phone number

Please return with your electric bill or mail to: Nobles Cooperative Electric, P.O. Box 788, Worthington, MN 56187-0788.

MANUFACTURERS COUPON | EXPIRES JUNE 30, 2009

SAVE $2.00

on any GE ENERGY SMART®, ENERGY STAR® qualified compact fluorescent lighting product **multi-pack**

Nobles Cooperative Electric

imagination at work

LEARN MORE AT energystar.gov

Consumer: Coupon valid only on your purchase of any GE ENERGY SMART®, ENERGY STAR® qualified compact fluorescent lighting product multi-pack. You pay sales tax. Coupon may not be reproduced or combined with another offer and is non-transferable. Void if transferred, exchanged, sold or reproduced. Offer limited to one purchase in U.S.A., its territories and military exchanges. **Retailer:** GE will reimburse you the face value plus 8¢ handling provided you have accepted this coupon in accordance with GE's Coupon Redemption Policy. Void where prohibited. Cash value 1/100 of 1¢. For copy of policy and/or coupon redemption mail to: GE Consumer & Industrial Lighting Products, P.O. Box 880650, El Paso, TX 88588-0650.

Coupon expires: June 30, 2009 **D204023 47215**

imagination at work is a trademark of General Electric Company. GE Energy Smart® is a registered mark of General Electric Company. ENERGY STAR and the ENERGY STAR mark are registered U.S. marks. © 2009 General Electric Company

0043168-047215

5 43168 55082 1

Compact fluorescent light bulb recycling options

CFLs contain a small amount of mercury that can be harmful to the environment, therefore it is important that they are recycled. In Minnesota, it is illegal to place them in the garbage.

You can now recycle your used CFLs for free at any Menards store in the state of Minnesota. You can also recycle CFLs at these local recycling centers:

- Schaap Sanitation Recycling Center, south on Highway 60, Worthington.
- Murray County Landfill, on County Road 29, south of Hadley.
- Slayton Recycling Center, 1820 Erlandson Avenue, Slayton.

You'll also have the opportunity to recycle your CFLs on June 25 at our Annual Meeting and Family Fun Day in Slayton. Be sure to read future *Current Matters* for more information.

Don't miss your opportunity to apply for a commercial or agricultural rebate application

Expenses add up quickly when operating a business or farm. Electricity can be a major expense for industrial, commercial and agricultural business owners, but help is available to lower electricity bills.

Nobles Cooperative Electric and its wholesale power provider, Great River Energy, offer many programs to lower electricity expenses by offering rebates and grants toward the purchase of energy-efficient equipment.

One of the most effective ways to save energy is by upgrading your farm and business lighting. Lighting accounts for more than 40 percent of the commercial sector electricity consumption in the United States. Energy-efficient lighting can drastically reduce energy costs. Better yet, investments made into efficient lighting will often be recouped through energy savings in one to four years.

All commercial, agricultural or industrial members of Nobles can apply for lighting rebates for new construction or retrofits. Rebates range from $2 to $80 per fixture and are available to qualifying members who purchase and install energy-efficient lighting.

Rebates are also available to members who replace existing motors with premium efficiency electric motors. Rebates apply to motors from 1 to 200 horsepower that meet premium efficiency standards. The cost of a new motor can often be recovered in just a few years, while the equipment will continue to generate savings for many years.

Do you have your own energy idea? Don't feel limited by the options your cooperative offers. Work with Nobles on a customized energy grant that is specific to your business.

Any commercial or industrial cooperative member who purchases and installs equipment that exceeds the efficiency of conventional models may be eligible for a grant. All grants must be pre-approved, so be sure to contact us first.

Plan ahead for proper grain bin clearance and safety this spring

It is easy to forget to practice safety when moving equipment near power lines. Take the time to be sure that all the routes from your yard to the field being planted are safe. Be sure there is adequate clearance for planters, grain carts, tractors and other large equipment. Keep in mind that the newer model of equipment you traded for last year may be taller than the model you traded in.

Farmers who are planning to install a new grain bin can save time by including Nobles Cooperative Electric in their planning process. The cooperative will provide assistance in planning for a safe environment for everyone working and living around grain bins. Placing grain bins in the proper location is extremely important. Adequate clearance with power lines can reduce the risk of an accident occurring. The National Electrical Safety Code (NESC) specifies the line clearance required for grain bins and electrical needs.

Another point to consider is that the electrical transformer at your bin site may not be of adequate size to handle additional bins or modifications to current facilities. Nobles urges you to contact us prior to construction or remodeling at grain storage sites.

Please be safe this spring!

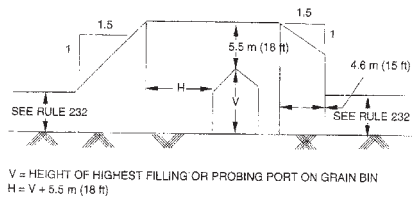

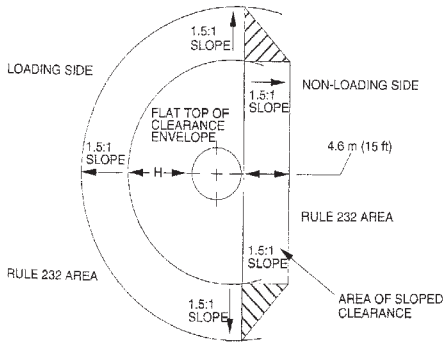

Clearance for grain bins filled by portable augers or conveyors.

Country Cupboard

Mabel Drenth
Adrian

Quick Chocolate Cake

2 c. flour
1 tsp. salt
1 tsp. baking powder
2 tsp. baking soda
3/4 c. cocoa
2 c. sugar
1 c. veg. oil
1 c. hot coffee
1 c. milk
2 eggs
1 tsp. vanilla

Sift dry ingredients together in a mixing bowl. Add oil, coffee and milk. Mix at medium speed for two minutes. Add eggs and vanilla (batter will be thin). Pour into a greased and floured jelly roll pan. Bake at 350 degrees for 30 minutes or until done.

Frosting

1/3 c. Crisco
1 egg white
1 tsp. vanilla
1/16 tsp. salt
2 c. powdered sugar

Put in bowl and beat. If too thick add a few drops of cold water. Sometimes I drizzle with chocolate frosting.

Chocolate Frosting

1/2 c. sugar
1 T. cocoa
2 T. milk
2 T. oleo
dash of salt

Boil 90 seconds. Add vanilla and beat until thick; drizzle over white frosting.

Send your favorite **recipe with Jell-O as an ingredient** to Nobles Cooperative Electric, ATTN: Tracey, P.O. Box 788, Worthington, MN 56187-0788. Entries must include your name, address, telephone number and location number. All entries must be received by April 13. The winning recipe will be featured in the next edition of *Current Matters* and the winner will receive a **$10 credit** on their electric bill.

Nobles Cooperative Electric
Your Touchstone Energy® Cooperative

Official monthly publication

Main office
22636 U.S. Hwy. 59, P.O. Box 788
Worthington, MN 56187-0788
Phone: 507-372-7331
Fax: 507-372-5148

Satellite office
1505 20th Street, P.O. Box 56
Slayton, MN 56172-0056
Phone: 507-836-6107

Website
www.noblesce.coop

E-mail address
nce@noblesce.com

Office hours
8:00 a.m. to 4:30 p.m.
Monday through Friday

24-Hour outage service
800-776-0517

Gopher State One-Call
800-252-1166

WildBlue tech support
888-326-4289

Electrical inspectors
Murray County
Randal Maha - 507-274-5261
Nobles County
Scott Preuss - 507-449-8870

General Manager
Richard G. Burud

Board of directors
Henry Hanson, President - 483-2417
Richard Greve, V. President - 376-5026
Ronald Schwartau, Sec./Treas. - 734-3052
David Clarke, Director - 425-2646
Dick Ruiter, Director - 443-5891
Gary Sieve, Director - 926-5455
Lee York, Director - 879-3497